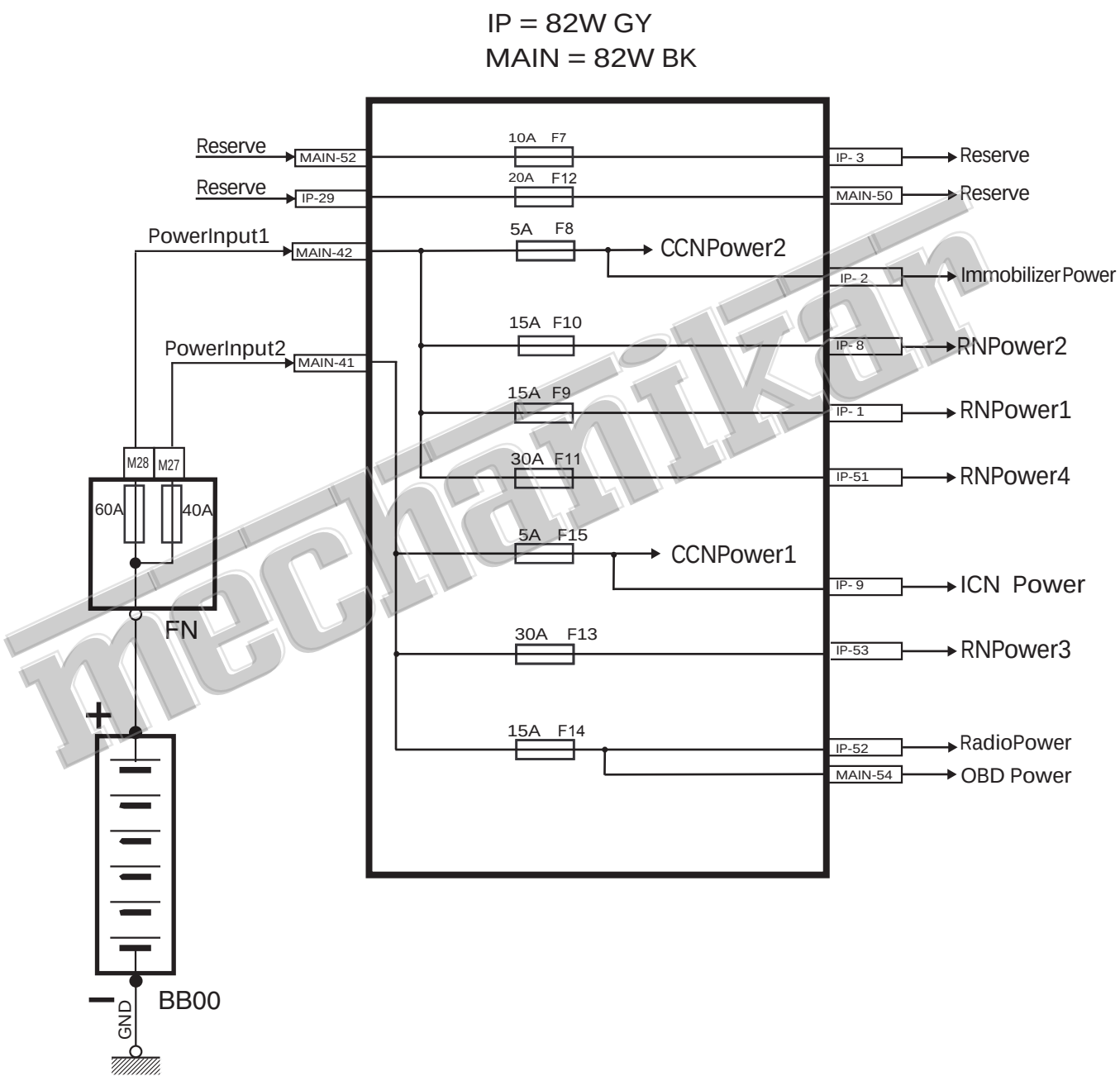
IP = 82W GY
MAIN = 82W BK
Reserve
MAIN-52
Reserve
IP-29
PowerInput1
MAIN-42
PowerInput2
MAIN-41
M28
M27
60A
40A
FN
BB00
GND
10A F7
20A F12
5A F8
CCNPower2
15A F10
15A F9
30A F11
5A F15
CCNPower1
30A F13
15A F14
IP- 3
Reserve
MAIN-50
Reserve
IP- 2
Immobilizer Power
IP- 8
RNPower2
IP- 1
RNPower1
IP-51
RNPower4
IP- 9
ICN Power
IP-53
RNPower3
IP-52
RadioPower
MAIN-54
OBD Power

mechanikar

Interior Fuse Box - Samand LX EF7 Bifuel SMS MUX Bosch ME17	ISACO	1301077

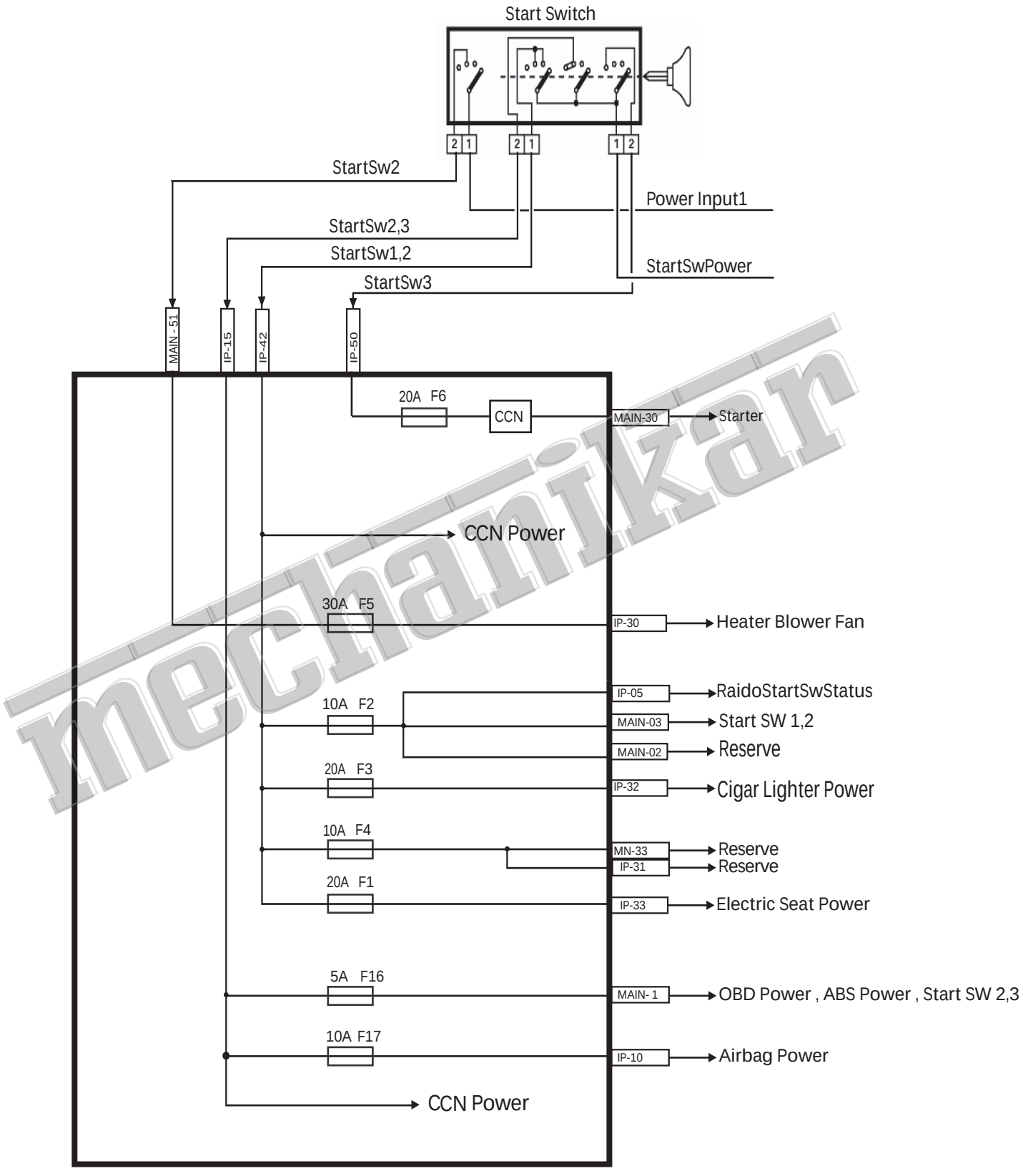

mechanikar

IP = 82W GY
MAIN = 82W BK

Drawn by: Engineering Dep. of ISACO	2018.17.03