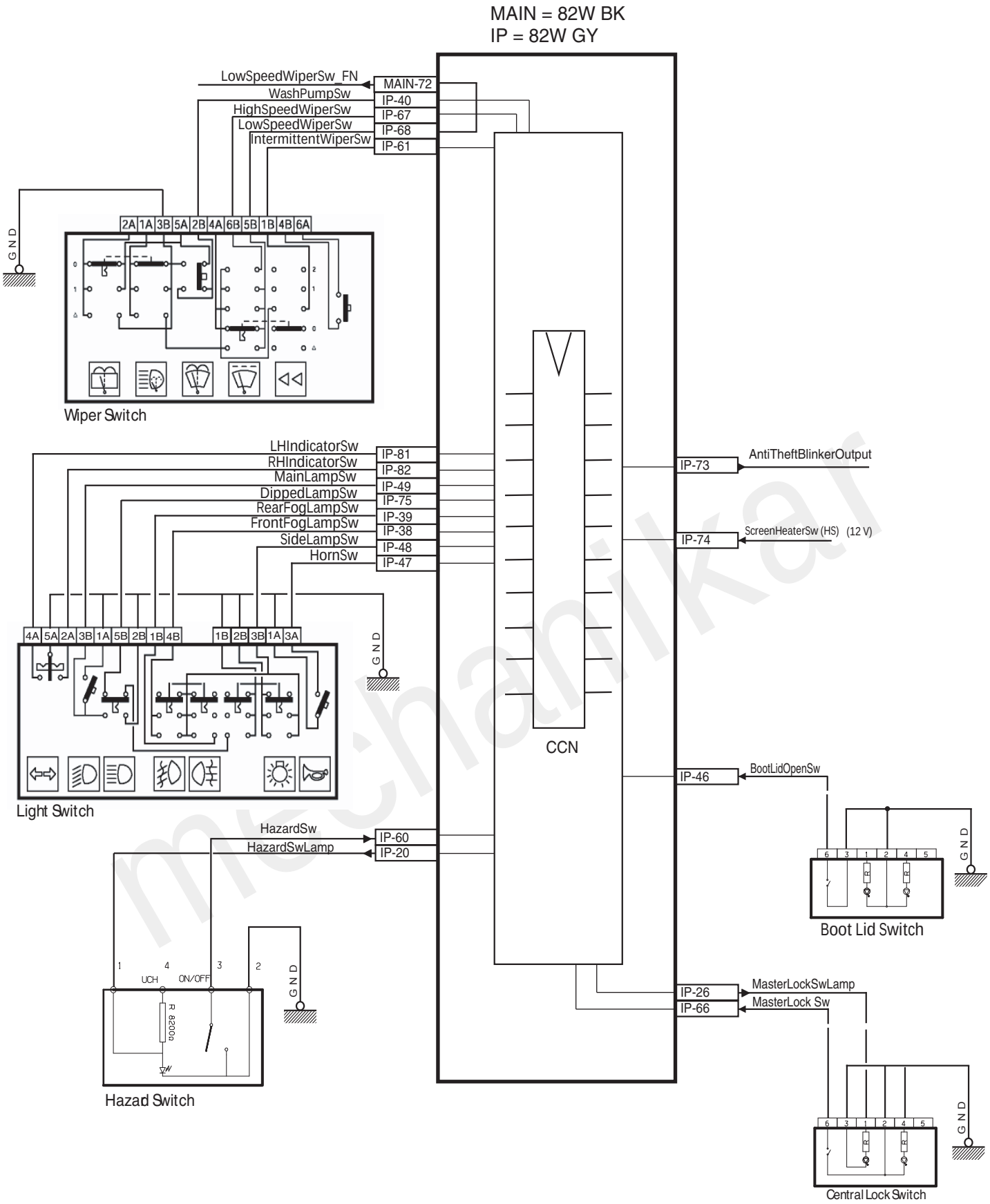
MAIN = 82W BK
IP = 82W GY
LowSpeedWiperSw_FN
WashPumpSw
HighSpeedWiperSw
LowSpeedWiperSw
IntermittentWiperSw
MAIN-72
IP-40
IP-67
IP-68
IP-61
GND
2A 1A 3B 5A 2B 4A 6B 5B 1B 4B 6A
Wiper Switch
LHIndicatorSw
RHIndicatorSw
MainLampSw
DippedLampSw
RearFogLampSw
FrontFogLampSw
SideLampSw
HornSw
IP-81
IP-82
IP-49
IP-75
IP-39
IP-38
IP-48
IP-47
4A 5A 2A 3B 1A 5B 2B 1B 4B
1B 2B 3B 1A 3A
Light Switch
CCN
IP-73
AntiTheftBlinkerOutput
IP-74
ScreenHeaterSw (HS) (12 V)
IP-46
BootLidOpenSw
Boot Lid Switch
HazardSw
HazardSwLamp
IP-60
IP-20
UCH
ON/OFF
R 8200
Hazad Switch
IP-26
IP-66
MasterLockSwLamp
MasterLock Sw
Central Lock Switch

mechanikar

CCN Node - Samand LX EF7 Bifuel SMS MUX Bosch ME17	ISACO	1101050

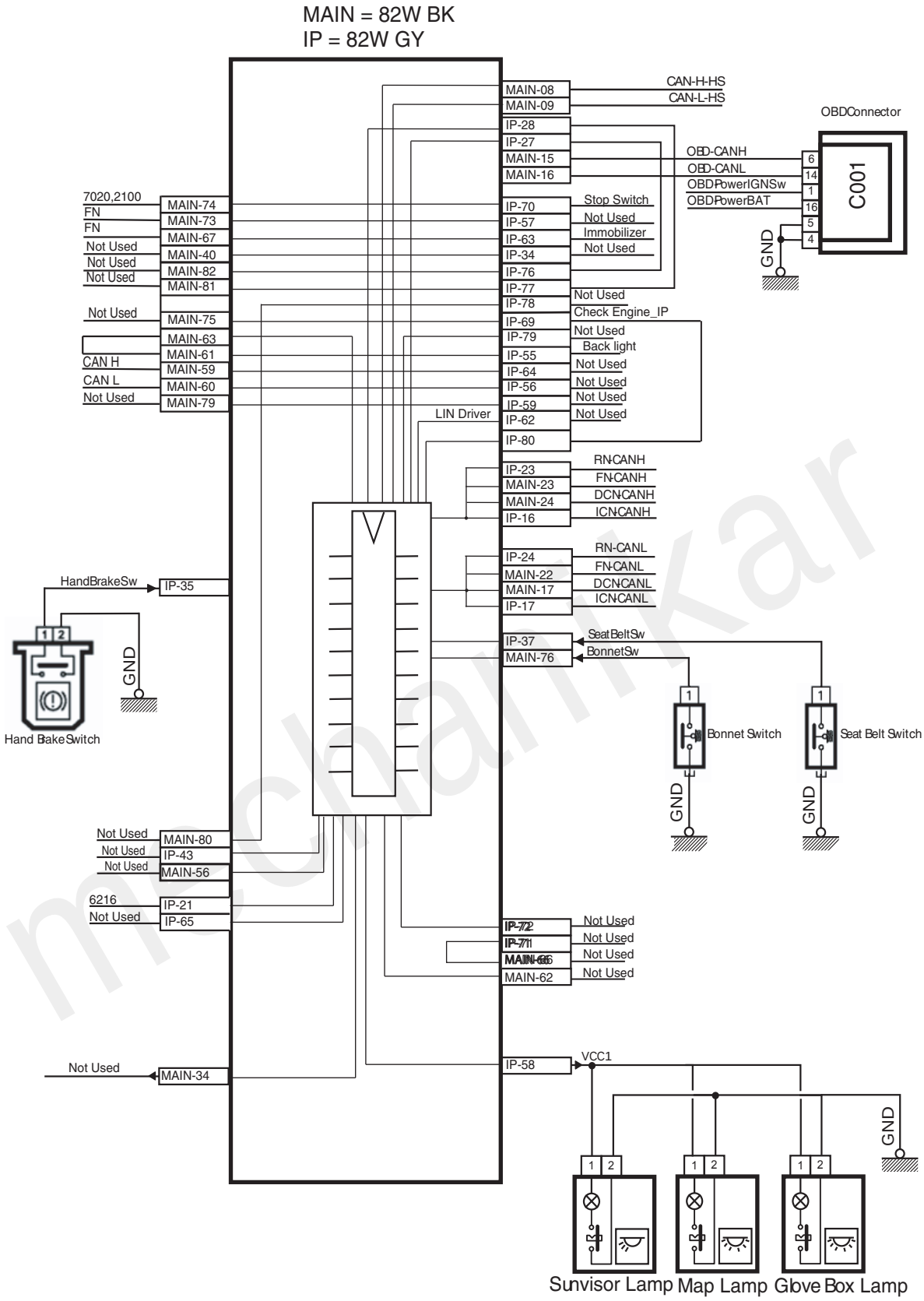

mechanikar

Drawn by: Engineering Dep. of ISACO	2018.17.03

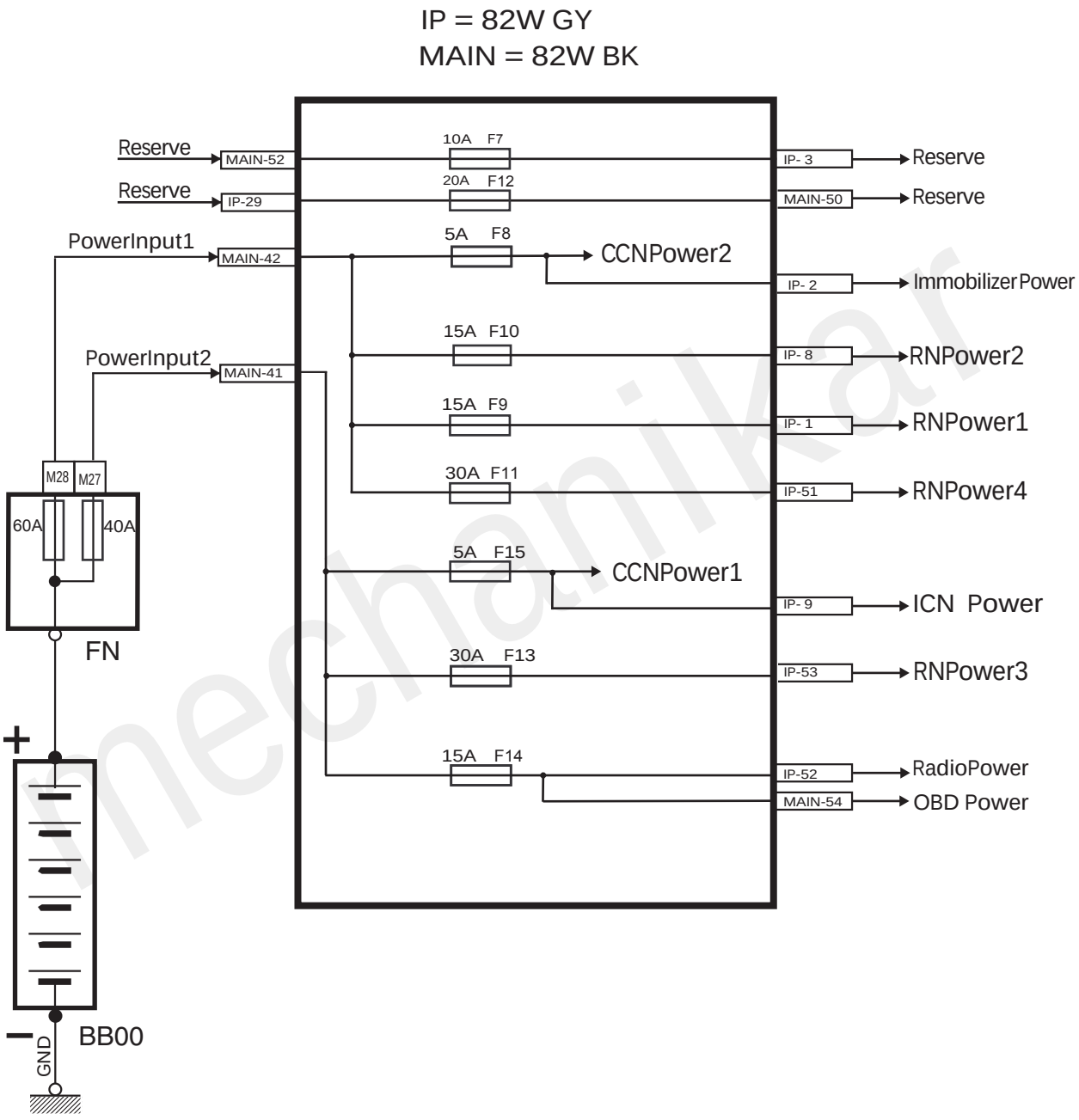
IP = 82W GY
MAIN = 82W BK
Reserve
MAIN-52
Reserve
IP-29
PowerInput1
MAIN-42
PowerInput2
MAIN-41
M28
M27
60A
40A
FN
+
BB00
GND
10A F7
20A F12
5A F8
CCNPower2
15A F10
15A F9
30A F11
5A F15
CCNPower1
30A F13
15A F14
IP- 3
Reserve
MAIN-50
Reserve
IP- 2
Immobilizer Power
IP- 8
RNPower2
IP- 1
RNPower1
IP-51
RNPower4
IP- 9
ICN Power
IP-53
RNPower3
IP-52
RadioPower
MAIN-54
OBD Power

mechanikar

CCN Node - Samand LX EF7 Bifuel SMS MUX Bosch ME17	ISACO	1101050

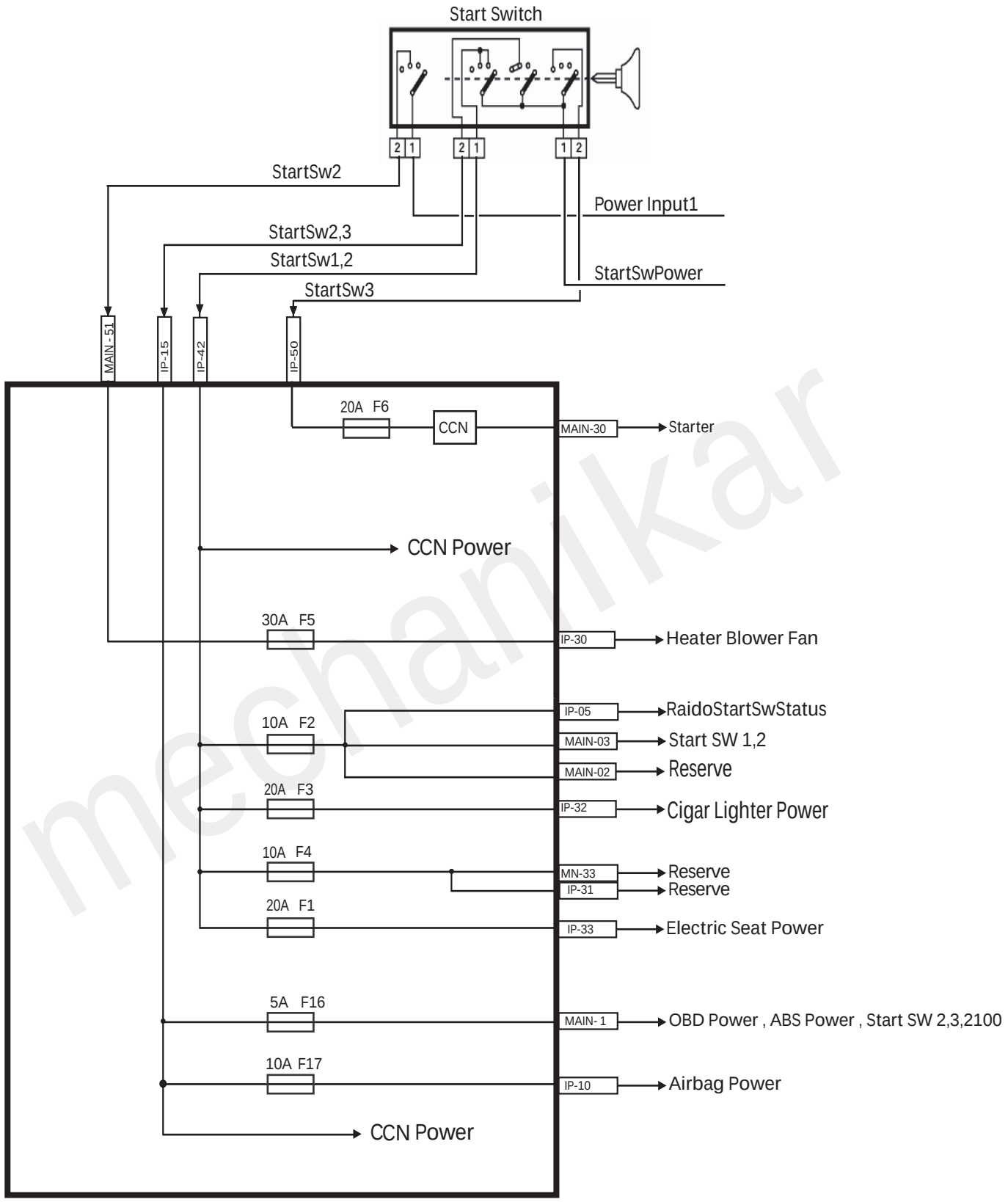

IP = 82W GY
MAIN = 82W BK

mechanikar

Drawn by: Engineering Dep. of ISACO	2018.17.03