DCN Node - Soren Turbo SMS MUX	ISACO	1101036

6000A

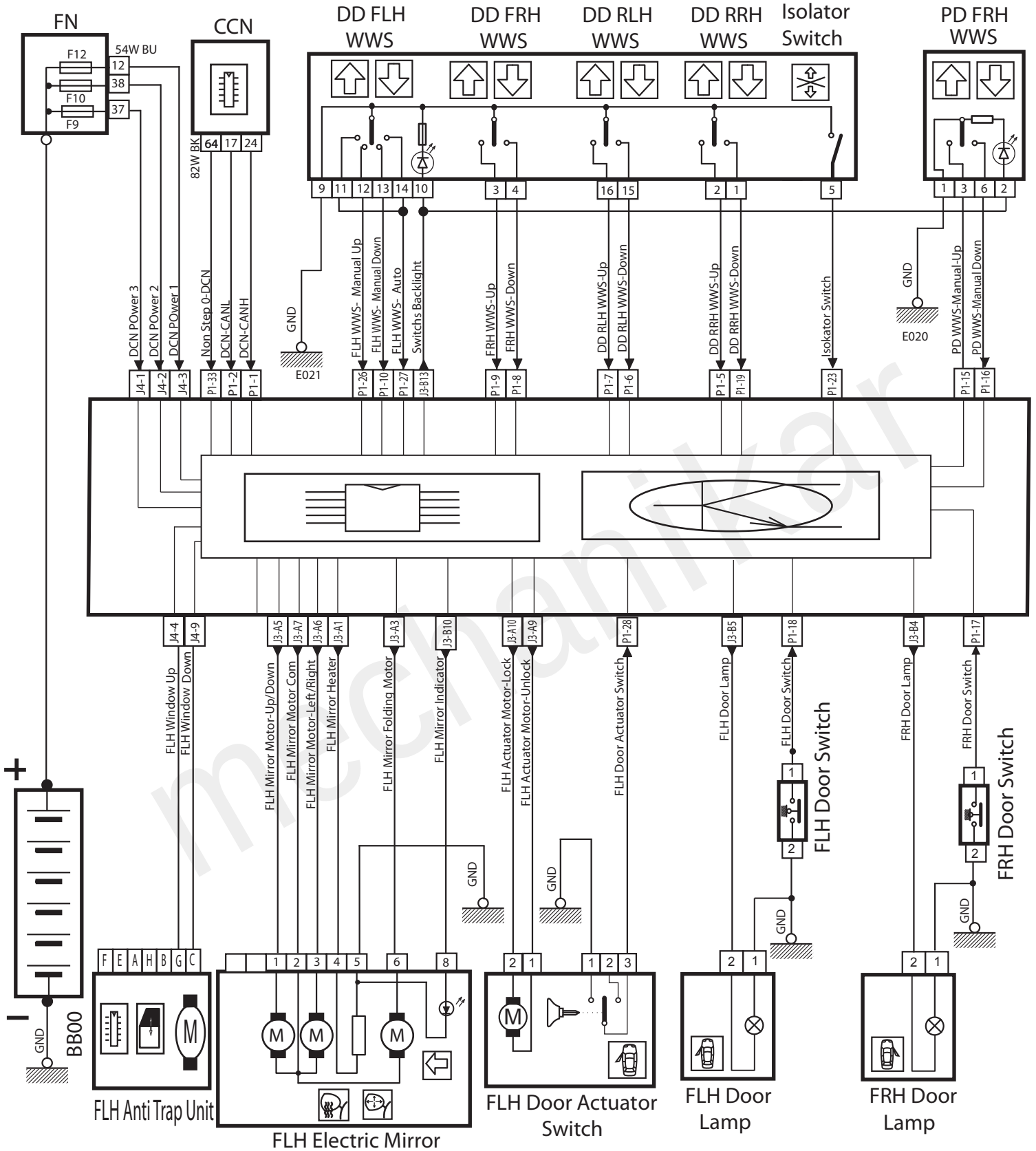

J3-A = 10W WI
J3-B = 14W WI
J4 = 9W WI
P1 = 40W WI

mechanikar

Drawn by: Engineering Dep. of ISACO	2015.24.10

6000B

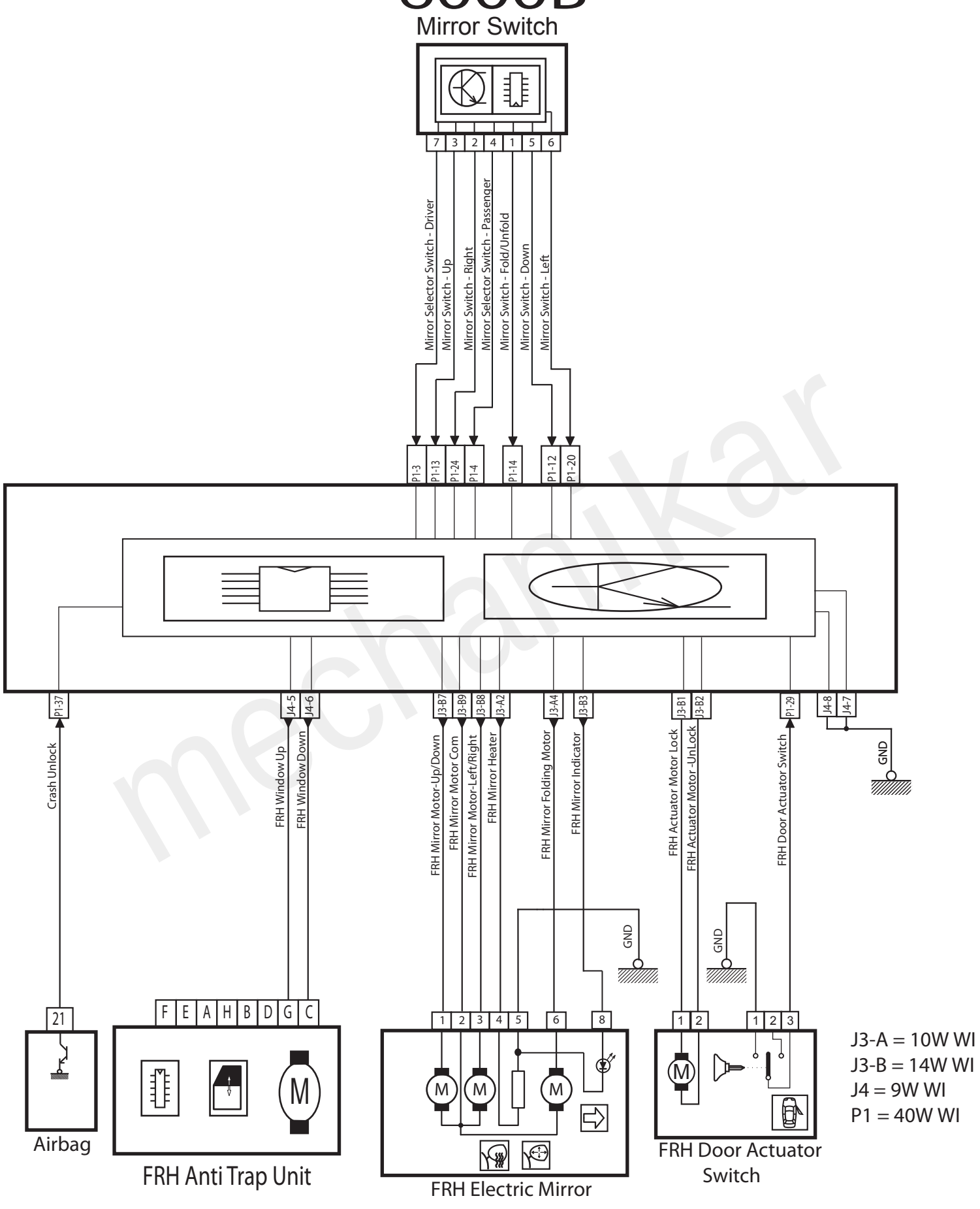

mechanikar