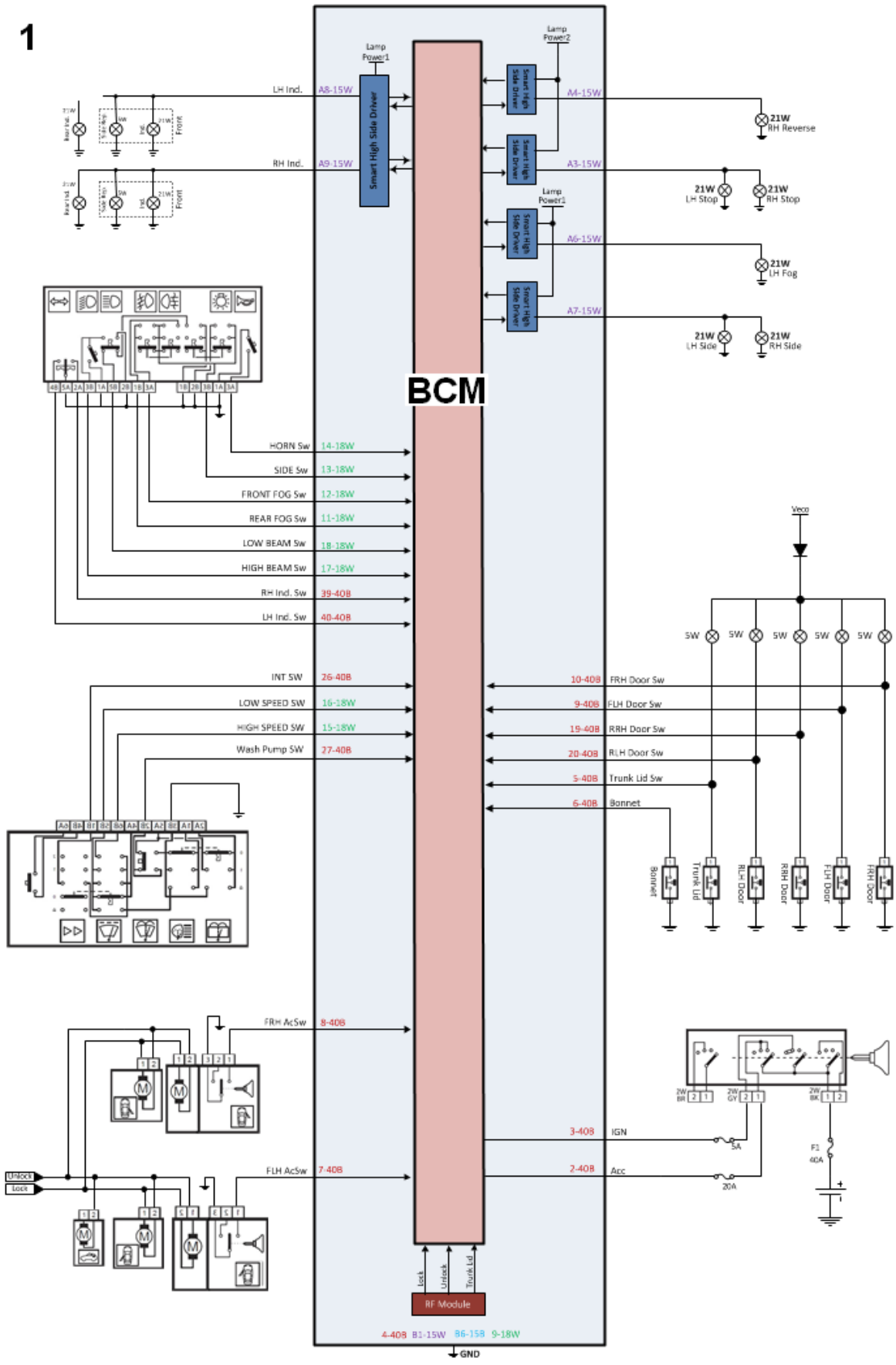
1
BCM
Lamp Power1
Lamp Power2
Smart High Side Driver
LH Ind.
RH Ind.
A8-15W
A9-15W
A4-15W
A3-15W
A6-15W
A7-15W
21W RH Reverse
21W LH Stop
21W RH Stop
21W LH Fog
21W LH Side
21W RH Side
HORN Sw 14-18W
SIDE Sw 13-18W
FRONT FOG Sw 12-18W
REAR FOG Sw 11-18W
LOW BEAM Sw 18-18W
HIGH BEAM Sw 17-18W
RH Ind. Sw 39-40B
LH Ind. Sw 40-40B
INT SW 26-40B
LOW SPEED SW 16-18W
HIGH SPEED SW 15-18W
Wash Pump SW 27-40B
FRH AcSw 8-40B
FLH AcSw 7-40B
10-40B FRH Door Sw
9-40B FLH Door Sw
19-40B RRH Door Sw
20-40B RLH Door Sw
5-40B Trunk Lid Sw
6-40B Bonnet
3-40B IGN
2-40B Acc
Veco
5W
Bonnet
Trunk Lid
RLH Door
RRH Door
FLH Door
FRH Door
Unlock
Lock
RF Module
4-40B B1-15W B6-15B 9-18W
GND

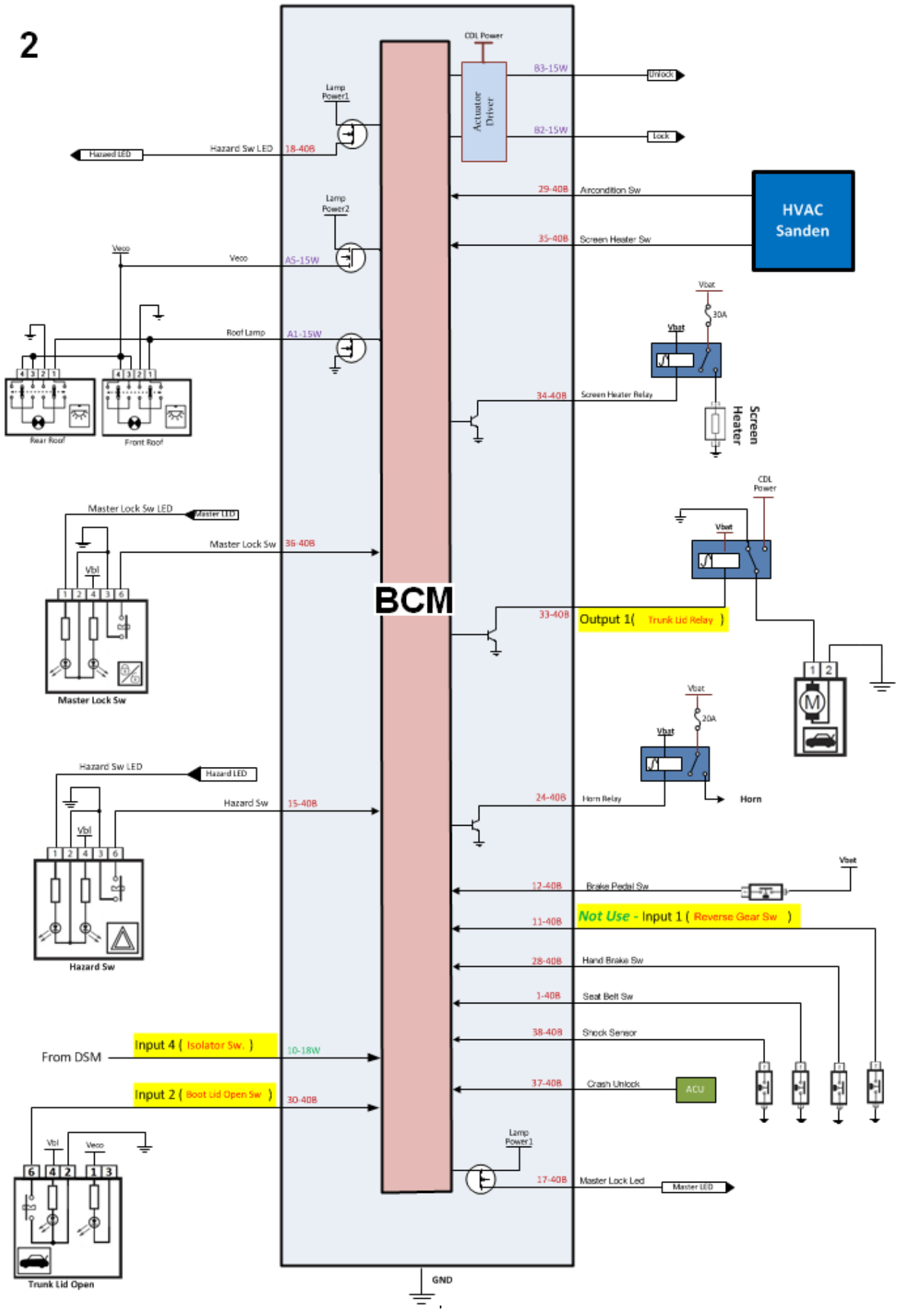
2
BCM
CDL Power
Actuator Driver
B3-15W
Unlock
B2-15W
Lock
Lamp Power1
Hazard Sw LED
18-40B
Hazard LED
Lamp Power2
29-40B
Aircondition Sw
HVAC Sanden
35-40B
Screen Heater Sw
Veco
A5-15W
Roof Lamp
A1-15W
Rear Roof
Front Roof
Vbat
30A
34-40B
Screen Heater Relay
Screen Heater
Master Lock Sw LED
Master LED
Master Lock Sw
36-40B
Vbl
Master Lock Sw
33-40B
Output 1(Trunk Lid Relay)
20A
Hazard Sw LED
Hazard LED
Hazard Sw
15-40B
Hazard Sw
24-40B
Horn Relay
Horn
12-40B
Brake Pedal Sw
11-40B
Not Use - Input 1 (Reverse Gear Sw)
28-40B
Hand Brake Sw
1-40B
Seat Belt Sw
38-40B
Shock Sensor
From DSM
Input 4 (Isolator Sw.)
10-18W
37-40B
Crash Unlock
ACU
Input 2 (Boot Lid Open Sw)
30-40B
17-40B
Master Lock Led
Trunk Lid Open
GND

3

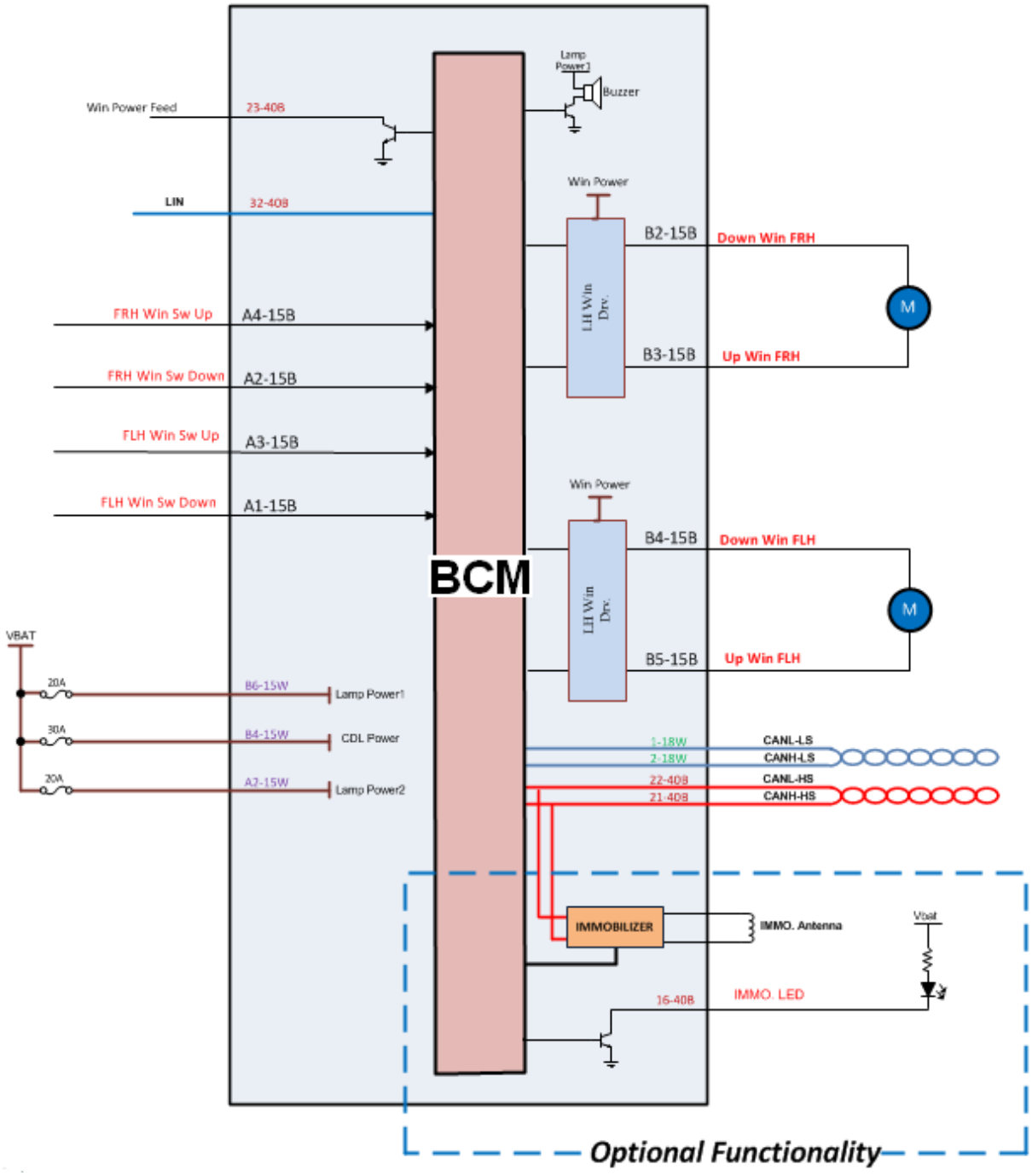
Win Power Feed
23-40B
LIN
32-40B
FRH Win Sw Up
A4-15B
FRH Win Sw Down
A2-15B
FLH Win Sw Up
A3-15B
FLH Win Sw Down
A1-15B
VBAT
20A
B6-15W
Lamp Power1
30A
B4-15W
CDL Power
20A
A2-15W
Lamp Power2
BCM
Lamp Power1
Buzzer
Win Power
LH Win Drv.
B2-15B
Down Win FRH
B3-15B
Up Win FRH
Win Power
LH Win Drv.
B4-15B
Down Win FLH
B5-15B
Up Win FLH
M
M
1-18W
2-18W
CANL-LS
CANH-LS
22-40B
21-40B
CANL-HS
CANH-HS
IMMOBILIZER
IMMO. Antenna
Vbat
16-40B
IMMO. LED
Optional Functionality

CBM HL Connector Specification						
Pin No.	Pin Description	I/O	Current (A)		Protection	Wire mm2
			Max.	Nom.		
1	Seat Belt Sw	I	r	r	r	0.35
2	Start Sw - ACC	I	r	r	Fuse	0.35
3	Start Sw - IGN	I	r	r	Fuse	0.35
4	GND	--	r	r	r	0.35
5	Trunk Lid Sw	I	r	r	r	0.35
6	Bonnet Sw	I	r	r	r	0.35
7	FLH Actuator Sw	I	r	r	r	0.35
8	FRH Actuator Sw	I	r	r	r	0.35
9	FLH Door Sw	I	r	r	r	0.35
10	FRH Door Sw	I	r	r	r	0.35
11	Reverse Gear Sw	I	r	r	r	0.35
12	Brake Pedal Sw	I	r	r	r	0.35
13	Wiper Auto Stop Sw	I	r	r	r	0.35
14	NC					
15	Hazard Sw	I	r	r	r	0.35
16	IMMO LED Out	O	100mA	50mA	Smart Sw	0.35
17	Master Lock LED	O	100mA	50mA	Smart Sw	0.35
18	Hazard Sw LED	O	100mA	50mA	Smart Sw	0.35
19	RRH Door Sw	I	r	r	r	0.35
20	RLH Door SW	I	r	r	r	0.35
21	HS CAN-H	Bus	r	r	r	0.35
22	HS CAN-L	Bus	r	r	r	0.35
23	Front Window Power Feed	O	200mA	160mA	Smart Sw	0.35
24	Siren Relay	O	200mA	160mA	Smart Sw	0.35
25	NC					
26	Wiper - INT Sw	I	r	r	Fuse	0.35
27	Wash Pump Sw	I	r	r	Fuse	0.35
28	Hand Brake Sw	I	r	r	r	0.35
29	Screen Heater Sw	I	r	r	r	0.35
30	Boot Lid Open Sw	I	r	r	r	0.35
31	K_Line	Bus	r	r	r	0.35
32	LIN	Bus	r	r	r	0.35
33	Trunk Lid Open Relay	O	200mA	160mA	Smart Sw	0.35
34	Screen Heater Relay	O	200mA	160mA	Smart Sw	0.35
35	Air Condition Sw	I	r	r	Fuse	0.35
36	Master Lock Sw	I	r	r	r	0.35
37	Crash Unlock	I	r	r	r	0.35
38	Shock Sensor	I	r	r	r	0.35
39	RH Indicator Sw	I	r	r	r	0.35
40	LH Indicator Sw	I	r	r	r	0.35

Connector 40 Pin Black (0-953118-1)

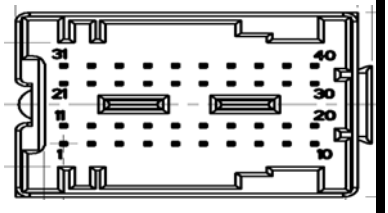

BCM نود مشکی پایه ۴۰ کانکتور Pin layout

Pin layout کانکتور ۱۵ پایه سفید نود BCM

BCM HL Connector Specification						
Pin No.	Pin Description	I/O	Current (A)		Protection	Wire mm2
			Max.	Nom.		
A1	Roof Lamps	O	5A	1.2A	Smart Sw	0.35
A2	BCM Power II	I	15A		Fuse	1.5
A3	Stop Lamps	O	4.2A	4A	Smart Sw	1
A4	Reverse Lamps	O	4.2A	4A	Smart Sw	1
A5	Veco Out	O	5A	4A	Smart Sw	1
A6	Rear Fog Lamps	O	4.2A	4A	Smart Sw	1
A7	Side Lamps	O	4A	4A	Smart Sw	1
A8	LH Indicator Lamps	O	5A	2.5A	Smart Sw	0.5
A9	RH Indicator Lamps	O	5A	2.5A	Smart Sw	0.5
B1	GND	O				2
B2	Door Unlock	O	20A	8A	Fuse	1.5
B3	Door Lock	O	20A	8A	Fuse	1.5
B4	BCM PWR CDL	I	30A		Fuse	1.5
B5	Wash Pump Relay	O	200mA	160mA	Smart Sw	0.35
B6	BCM Power I	I	20A		Fuse	1.5

Connector 15 Pin White (98315-0010)

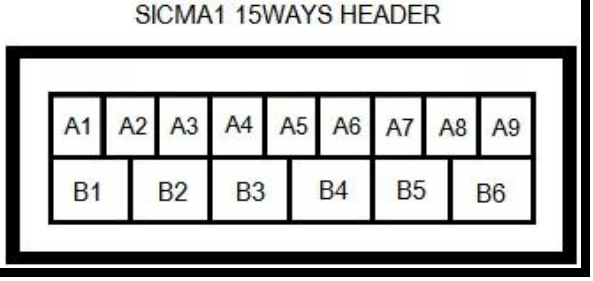

Pin layout کانکتور ۱۵ پایه مشکی نود BCM

BCM HL Connector Specification						
Pin No.	Pin Description	I/O	Current (A)		Protection	Wire mm2
			Max.	Nom.		
A1	FL Win Down Sw	O	r	r	Fuse	0.35
A2	FR Win Down Sw	O	r	r	Fuse	0.35
A3	FL Win Up Sw	O	r	r	Fuse	0.35
A4	FR Win Up Sw	O	r	r	Fuse	0.35
A5	---					
A6	---					
A7	---					
A8	---					
A9	---					
B1	BCM PWR WIN	I	30A		Fuse	1.5
B2	FR Win Down Out	O	30A	7A	Fuse	1.5
B3	FR Win Up Out	O	30A	7A	Fuse	1.5
B4	FL Win Down Out	O	30A	7A	Fuse	1.5
B5	FL Win Up Out	O	30A	7A	Fuse	1.5
B6	GND	---	30A			1.5

Connector 15 Pin Black (98315-0001

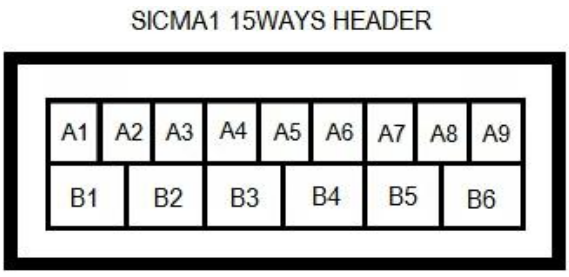

)

Pin layout کانکتور ۱۸ پایه سفید نود BCM

BCM HL Connector Specification						
Pin No.	Pin Description	I/O	Current (A)		Protection	Wire mm2
			Max.	Nom.		
1	LS CAN-L	Bus	r	r	r	0.35
2	LS CAN-H	Bus	r	r	r	0.35
3	Wiper ON/OFF Relay Out	O	200mA	160mA	Smart Sw	0.35
4	Horn Relay Out	O	200mA	160mA	Smart Sw	0.35
5	Front Fog Relay Out	O	200mA	160mA	Smart Sw	0.35
6	Low Beam Relay Out	O	200mA	160mA	Smart Sw	0.35
7	High Beam Relay Out	O	200mA	160mA	Smart Sw	0.35
8	Wiper LS/HS Relay Out	O	200mA	160mA	Smart Sw	0.35
9	GND	---				0.6
10	Evaporator Temp	I	r	r	r	0.35
11	Rear Fog SW	I	r	r	r	0.35
12	Front Fog Sw	I	r	r	r	0.35
13	Side Lamps Sw	I	r	r	r	0.35
14	Horn Sw	I	r	r	r	0.35
15	Wiper High Speed Sw	I	r	r	r	0.35
16	Wiper Low Speed Sw	I	r	r	r	0.35
17	High Beam Sw	I	r	r	r	0.35
18	Low Beam Sw	I	r	r	r	0.35

Connector 18 Pin White (2-185529-2)

