Node DDN-Samand & Soren MUX	ISACO	1101015

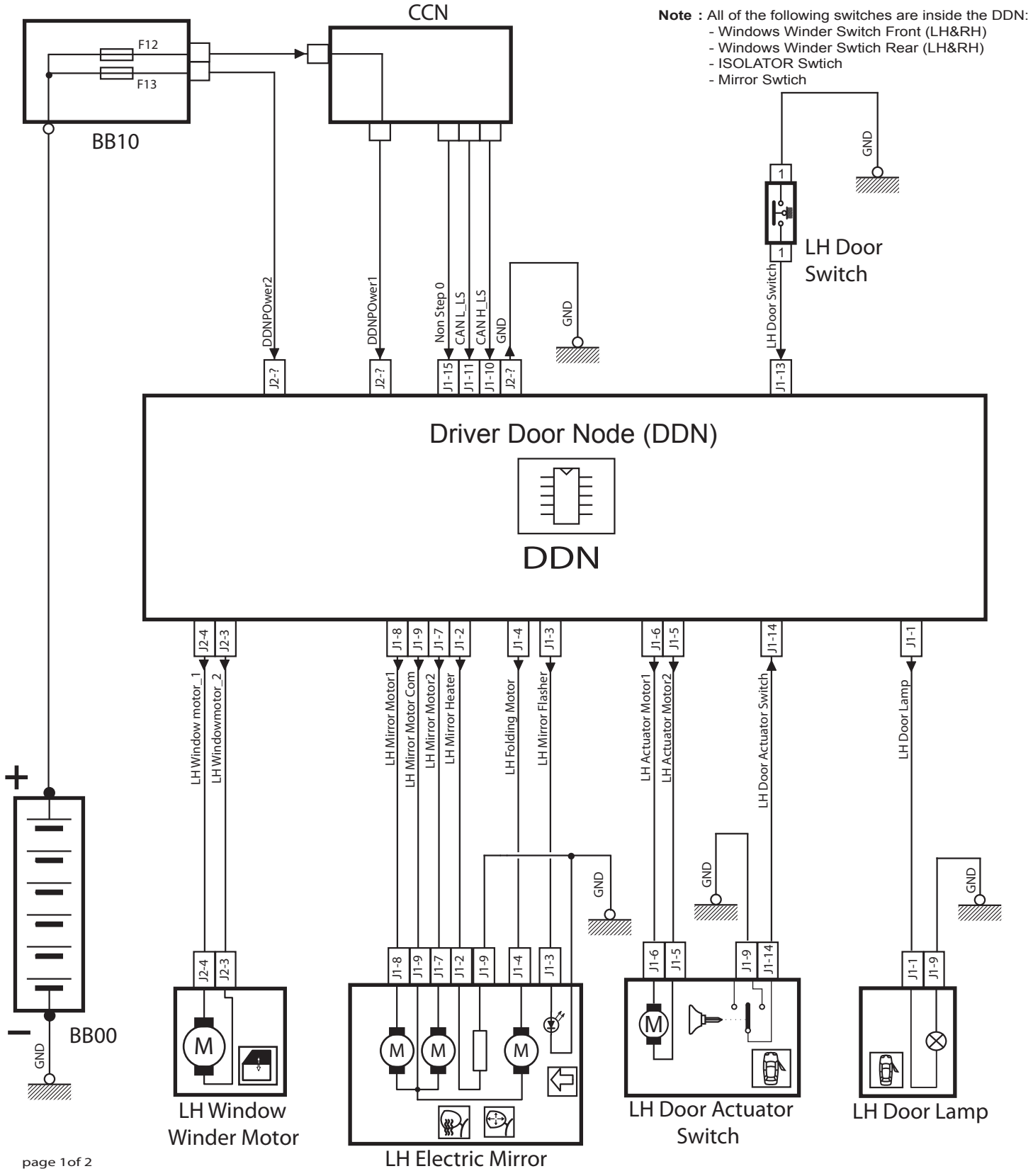

Drawn by: Engineering Dep. of ISACO	2013.12.21

Pin number	Name
A1	VBAT2
A2	GND
A3	Window Motor 2
A4	Window Motor 1
A5	VBAT1

Pin number	Name
1	Door Lamp
2	Mirror Heater
3	Mirror Flasher
4	Folding Motor
5	Actuator Motor 2
6	Actuator Motor 1
7	Mirror Motor 2
8	Mirror Motor 1
9	Mirror Motor COM
10	CAN H
11	CAN L
12	Not used
13	Door Switch
14	Actuator switch
15	Non Step0
16	Outdoor Temperature Sensor *
17	Not used
18	Mirror Motor COM

* PDN only

